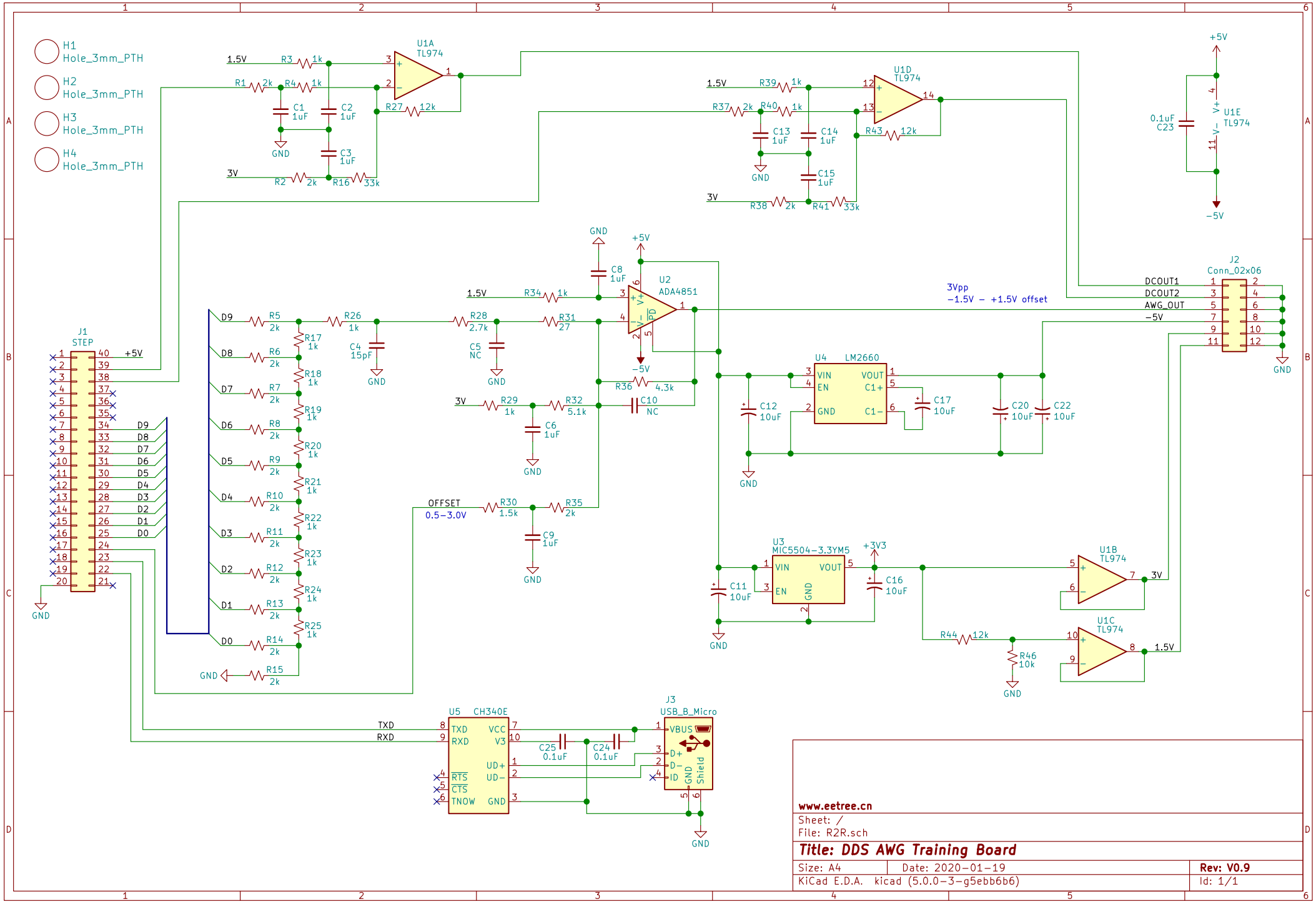
H1 Hole_3mm_PTH
H2 Hole_3mm_PTH
H3 Hole_3mm_PTH
H4 Hole_3mm_PTH
U1A TL974
U1D TL974
U1E TL974
U1B TL974
U1C TL974
U2 ADA4851
U3 MIC5504-3.3YM5
U4 LM2660
U5 CH340E
J1 STEP
J2 Conn_02x06
J3 USB_B_Micro
3Vpp
−1.5V – +1.5V offset
OFFSET
0.5–3.0V
DCOUT1
DCOUT2
AWG_OUT
−5V
TXD
RXD
+5V
+3V3
GND
www.eetree.cn
Sheet: /
File: R2R.sch
Title: DDS AWG Training Board
Size: A4
Date: 2020-01-19
Rev: V0.9
KiCad E.D.A. kicad (5.0.0-3-g5ebb6b6)
Id: 1/1