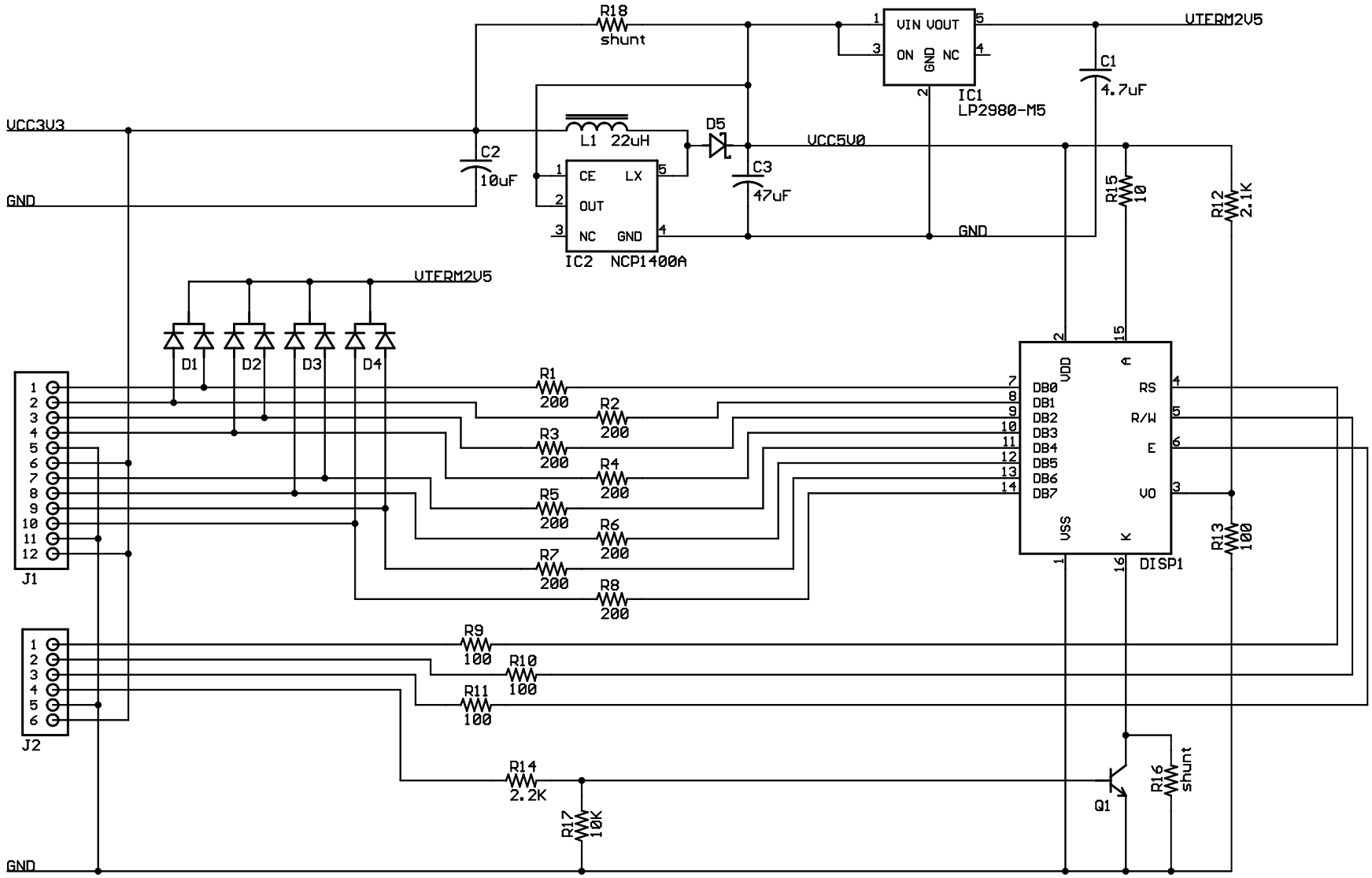

WEEE

Digilent Inc.

PmodCLP - Character LCD, Parallel

Copyright 2007, 2008, Digilent Inc.

SHEET:	Engineer: NEA
TITLE: PmodCLP	Author: NEA
Doc#: 500-142	Date: 04/04/2008
	Rev: B
	Sheet: 1/1

Digilent Inc. ROHS CHINA