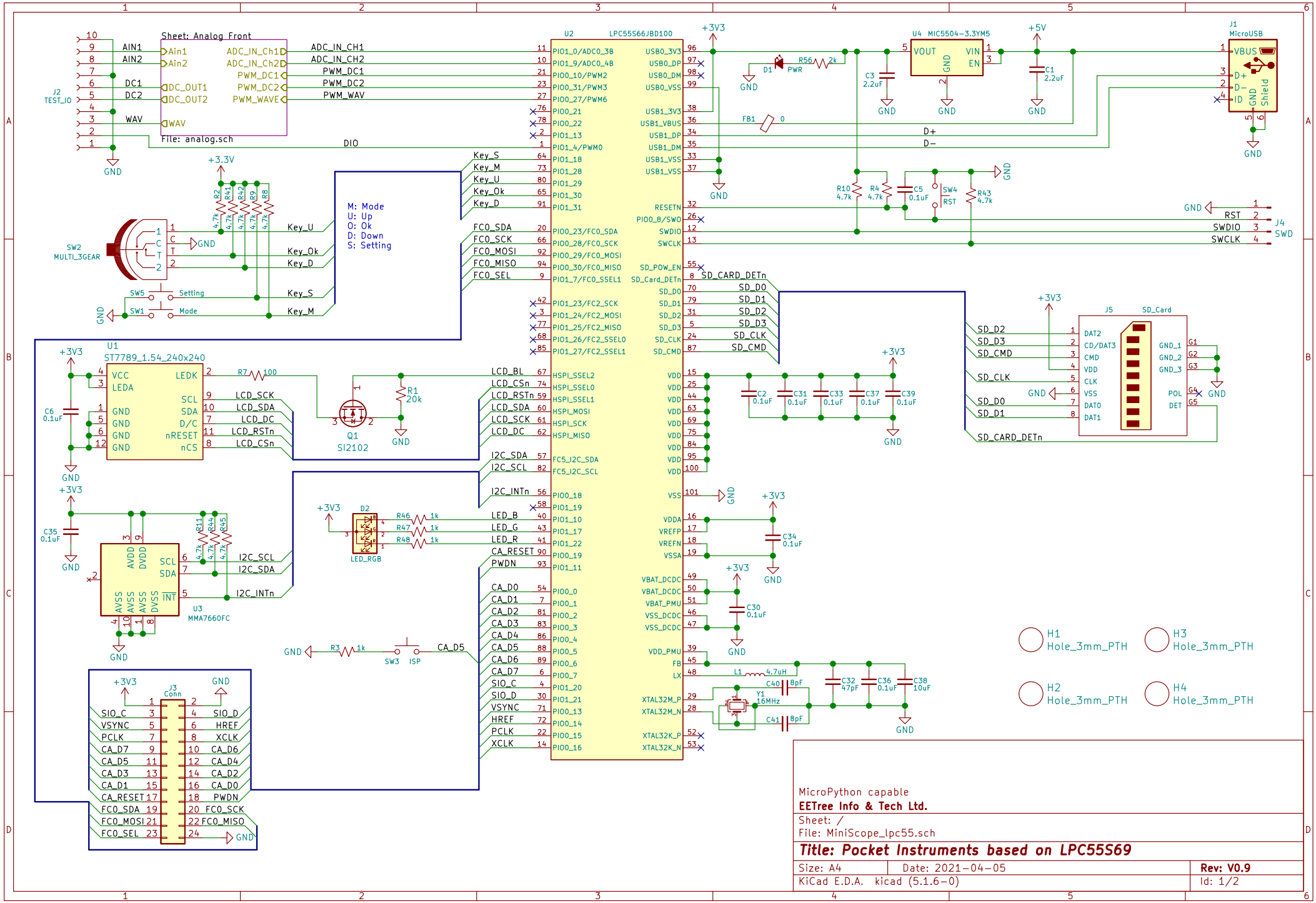
Sheet: Analog Front
File: analog.sch
J2 TEST_IO
AIN1
AIN2
DC1
DC2
WAV
ADC_IN_CH1
ADC_IN_CH2
PWM_DC1
PWM_DC2
PWM_WAVE
DIO
U2 LPC55S66JBD100
U4 MIC5504-3.3YM5
J1 MicroUSB
D1 PWR
R56 2k
FB1 0
D+
D-
SW2 MULTI_3GEAR
SW5 Setting
SW1 Mode
Key_S
Key_M
Key_U
Key_Ok
Key_D
M: Mode
U: Up
O: Ok
D: Down
S: Setting
SW4 RST
RST
SWDIO
SWCLK
J4 SWD
U1 ST7789_1.54_240x240
LCD_SCK
LCD_SDA
LCD_DC
LCD_RSTn
LCD_CSn
LCD_BL
Q1 SI2102
R1 20k
R7 100
J5 SD_Card
SD_CARD_DETn
SD_D0
SD_D1
SD_D2
SD_D3
SD_CLK
SD_CMD
I2C_SDA
I2C_SCL
I2C_INTn
U3 MMA7660FC
D2 LED_RGB
LED_B
LED_G
LED_R
CA_RESET
PWDN
CA_D0
CA_D1
CA_D2
CA_D3
CA_D4
CA_D5
CA_D6
CA_D7
SIO_C
SIO_D
VSYNC
HREF
PCLK
XCLK
FC0_SDA
FC0_SCK
FC0_MOSI
FC0_MISO
FC0_SEL
SW3 ISP
J3 Conn
Y1 16MHz
L1 4.7uH
H1 Hole_3mm_PTH
H2 Hole_3mm_PTH
H3 Hole_3mm_PTH
H4 Hole_3mm_PTH
MicroPython capable
EETree Info & Tech Ltd.
Sheet: /
File: MiniScope_lpc55.sch
Title: Pocket Instruments based on LPC55S69
Size: A4
Date: 2021-04-05
Rev: V0.9
KiCad E.D.A. kicad (5.1.6-0)
Id: 1/2

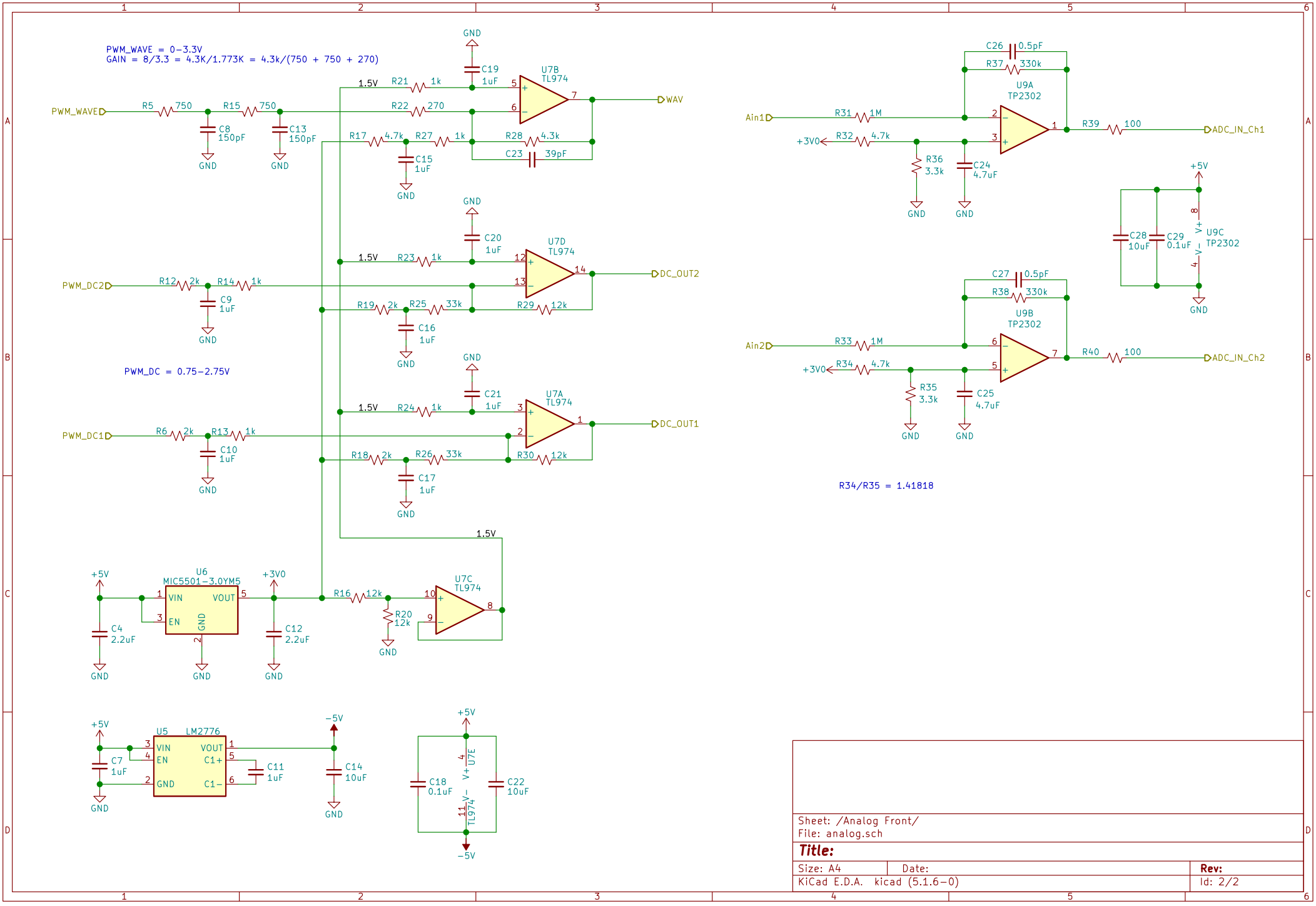

Sheet: /Analog Front/
File: analog.sch

Title:

Size: A4	Date:	Rev:
KiCad E.D.A. kicad (5.1.6-0)		Id: 2/2